New Jersey Semi-Conductor Products, Inc.

20 STERN AVE.
SPRINGFIELD, NEW JERSEY 07081
U.S.A.

TELEPHONE: (973) 376-2922
(212) 227-6005
FAX: (973) 376-8960

PART# **1N4549B thru 1N4556B**

50 WATT ZENER DIODES

***ELECTRICAL CHARACTERISTICS @ 30°C Case Temperature**

JEDEC TYPE NO.	NOMINAL ZENER VOLTAGE V_Z @ I_{ZT} Volts (Note 2) †	ZENER TEST CURRENT (I_{ZT}) mA †	MAX. DYNAMIC IMPEDANCE (Note 3) †		MAX. DC ZENER CURRENT (I_{ZM}) mA	MAX. REVERSE CURRENT** I_R(max) @ V_R		TYPICAL TEMP. COEFF. α_{VZ} %/°C
			Z_{ZT} @ I_{ZT} OHMS	Z_{ZK} @ I_{ZK} = 5 mA OHMS		µA	VOLTS	
1N4549B	3.9	3,200	0.16	400	11,900	150	0.5	-0.046
1N4550B	4.3	2,900	0.16	500	10,650	150	0.5	-0.033
1N4551B	4.7	2,650	0.12	600	9,700	100	1.0	-0.015
1N4552B	5.1	2,450	0.12	650	8,900	20	1.0	+/-0.010
1N4553B	5.6	2,250	0.12	900	8,100	20	1.0	+0.030
1N4554B	6.2	2,000	0.14	1,000	7,300	20	2.0	+0.049
1N4555B	6.8	1,850	0.16	200	6,650	10	2.0	+0.053
1N4556B	7.5	1,650	0.24	100	6,050	10	3.0	+0.057

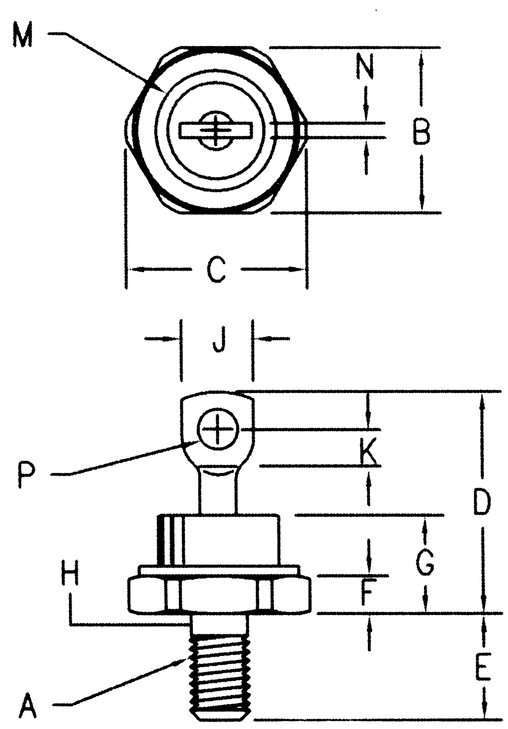

Notes:
1. Full threads within 2 1/2 threads
2. Standard Polarity: Stud is Cathode
   Reverse Polarity: Stud is Anode

Dim.	Inches		Millimeter		
	Minimum	Maximum	Minimum	Maximum	Notes
A	---	---	---	---	1/4-28
B	.667	.687	16.95	17.44	
C	---	.793	---	20.14	
D	---	1.00	---	25.40	
E	.422	.453	10.72	11.50	
F	.115	.200	2.92	5.08	
G	---	.450	---	11.43	
H	.220	.249	5.59	6.32	1
J	.250	.375	6.35	9.52	
K	.156	---	3.97	---	
M	---	.667	---	16.94	Dia
N	---	.080	---	2.03	
P	.140	.175	3.56	4.44	Dia

(DO-5)

Quality Semi-Conductors

Regulates voltage over a broad operating current and temperature range

Standard voltage tolerances are +/- 5% with B suffix, +/-10% with an A suffix, and +/-20% with no suffix

Consult factory for +/-2% or +/-1% with a C or D suffix respectively

Reverse polarity available ADD "R"