New Jersey Semi-Conductor Products, Inc.

20 STERN AVE.
SPRINGFIELD, NEW JERSEY 07081
U.S.A.

TELEPHONE: (973) 376-2922
(212) 227-6005
FAX: (973) 376-8960

2N6845
IRFF9120

MECHANICAL DATA
Dimensions in mm (inches)

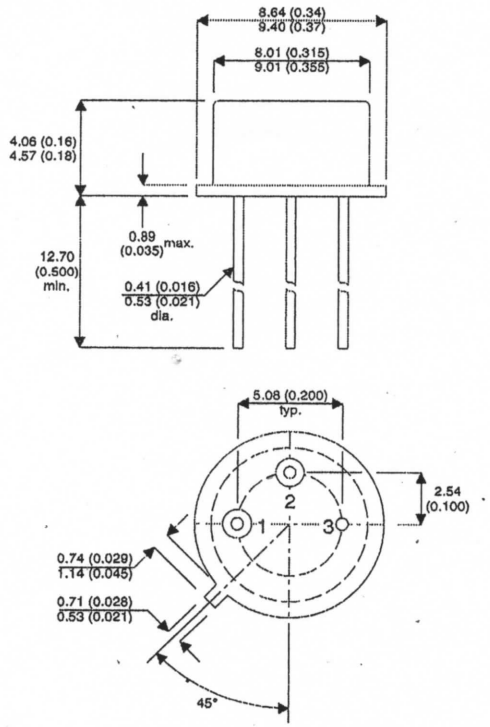

TO–39 (TO-205AF) METAL PACKAGE

PIN1 – Source PIN 2 – Gate PIN 3 – Drain

P–CHANNEL ENHANCEMENT MODE HIGH VOLTAGE POWER MOSFETS

V_{DSS}	-100V
$I_{D(cont)}$	-4.0A
$R_{DS(on)}$	0.60Ω

FEATURES

- HERMETICALLY SEALED TO–39 METAL PACKAGE
- SIMPLE DRIVE REQUIREMENTS
- LIGHTWEIGHT
- SCREENING OPTIONS AVAILABLE

ABSOLUTE MAXIMUM RATINGS (T_{case} = 25°C unless otherwise stated)

V_{GS}	Gate – Source Voltage		±20V
I_D	Continuous Drain Current	(V_{GS} = 0 , T_{case} = 25°C)	-4.0A
I_D	Continuous Drain Current	(V_{GS} = 0 , T_{case} = 100°C)	-2.6A
I_{DM}	Pulsed Drain Current [1]		-16A
P_D	Power Dissipation @ T_{case} = 25°C		20 W
	Linear Derating Factor		0.16 W/°C
T_J , T_{stg}	Operating and Storage Temperature Range		–55 to 150°C
T_L	Package Mounting Surface Temperature (for 5 sec)		300°C
$R_{\theta JC}$	Thermal Resistance Junction to Case		6.25°C/W

Notes

1) Repetitive Rating – Pulse width limited by maximum junction temperature.

ELECTRICAL CHARACTERISTICS (T_{amb} = 25°C unless otherwise stated)

	Parameter	Test Conditions		Min.	Typ.	Max.	Unit
	STATIC ELECTRICAL RATINGS						
BV_{DSS}	Drain – Source Breakdown Voltage	V_{GS} = 0	I_D = - 1mA	- 100			V
$\frac{\Delta BV_{DSS}}{\Delta T_J}$	Temperature Coefficient of Breakdown Voltage	Reference to 25°C I_D = - 1mA			- 0.10		V/°C
$R_{DS(on)}$	Static Drain – Source On–State Resistance [1]	V_{GS} = - 10V	I_D = - 2.6A			0.60	Ω
		V_{GS} = - 10V	I_D = - 4.0A			0.69	
$V_{GS(th)}$	Gate Threshold Voltage	V_{DS} = V_{GS}	I_D = -250μA	- 2		- 4	V
g_{fs}	Forward Transconductance [1]	V_{DS} > -15V	I_D = -2.6A	1.25			S
I_{DSS}	Drain-to-Source Leakage Current	V_{DS} = - 80V	V_{GS} = 0			-25	μA
			T_J = 125°C			-250	
I_{GSS}	Forward Gate – Source Leakage	V_{GS} = 20V				100	nA
I_{GSS}	Reverse Gate – Source Leakage	V_{GS} = –20V				-100	
	DYNAMIC CHARACTERISTICS						
C_{iss}	Input Capacitance	V_{GS} = 0			380		pF
C_{oss}	Output Capacitance	V_{DS} = - 25V			170		
C_{rss}	Reverse Transfer Capacitance	f = 1MHz			45		
Q_g	Total Gate Charge	V_{GS} = -10V	I_D = -4.0A	4.3		16.3	nC
Q_{gs}	Gate – Source Charge	V_{DS} = -50V		1.3		4.7	
Q_{gd}	Gate – Drain ("Miller") Charge			1.0		9.0	
$t_{d(on)}$	Turn–On Delay Time	V_{DD} = -50V				60	ns
t_r	Rise Time	I_D = - 4.0A				100	
$t_{d(off)}$	Turn–Off Delay Time	R_G = 7.5Ω				50	
t_f	Fall Time					70	
	SOURCE – DRAIN DIODE CHARACTERISTICS						
I_S	Continuous Source Current	Mosfet symbol showing the integral reverse p-n junction diode 				- 4.0	A
I_{SM}	Pulse Source Current					- 16	
V_{SD}	Diode Forward Voltage[1]	I_S = - 4.0A V_{GS} = 0V	T_J = 25°C			- 4.8	V
t_{rr}	Reverse Recovery Time[1]	I_F = -4.0A	T_J = 25°C			200	ns
Q_{rr}	Reverse Recovery Charge[1]	$d_i / d_t \leq$ -100A/μs	$V_{DD} \leq$ -50V			3.1	μC
t_{on}	Forward Turn–On Time				Negligible		

Notes

1) Pulse Test: Pulse Width ≤ 300ms, δ ≤ 2%