New Jersey Semi-Conductor Products, Inc.

20 STERN AVE.
SPRINGFIELD, NEW JERSEY 07081
U.S.A.

TELEPHONE: (973) 376-2922
(212) 227-6005
FAX: (973) 376-8960

Silicon PNP Power Transistor — BD808

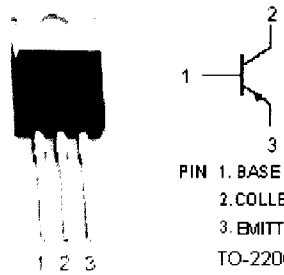

PIN 1. BASE
2. COLLECTOR
3. EMITTER
TO-220C package

DESCRIPTION

- DC Current Gain -
  : h_{FE} =30@ I_C= -2A
- Collector-Emitter Sustaining Voltage-
  : $V_{CEO(SUS)}$= -60V(Min)
- Complement to Type BD807

APPLICATIONS

- Designed for use in high power audio amplifiers utilizing complementary or quasi complementary circuits.

ABSOLUTE MAXIMUM RATINGS(T_a=25℃)

SYMBOL	PARAMETER	VALUE	UNIT
V_{CBO}	Collector-Base Voltage	-70	V
V_{CEO}	Collector-Emitter Voltage	-60	V
V_{EBO}	Emitter-Base Voltage	-5	V
I_C	Collector Current-Continuous	-10	A
I_B	Base Current	-6	A
P_C	Collector Power Dissipation @ T_C=25℃	90	W
T_J	Junction Temperature	150	℃
T_{stg}	Storage Temperature Range	-55~150	℃

THERMAL CHARACTERISTICS

SYMBOL	PARAMETER	MAX	UNIT
$R_{th\ j\text{-}c}$	Thermal Resistance, Junction to Case	1.39	℃/W

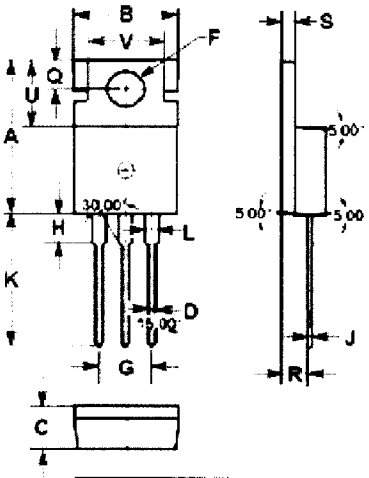

DIM	mm MIN	mm MAX
A	15.70	15.90
B	9.90	10.10
C	4.20	4.40
D	0.70	0.90
F	3.40	3.60
G	4.98	5.18
H	2.70	2.90
J	0.44	0.46
K	13.20	13.40
L	1.10	1.30
Q	2.70	2.90
R	2.50	2.70
S	1.29	1.31
U	6.45	6.65
V	8.66	8.86

NJ Semi-Conductors reserves the right to change test conditions, parameter limits and package dimensions without notice. Information furnished by NJ Semi-Conductors is believed to be both accurate and reliable at the time of going to press. However, NJ Semi-Conductors assumes no responsibility for any errors or omissions discovered in its use. NJ Semi-Conductors encourages customers to verify that datasheets are current before placing orders.

Quality Semi-Conductors

ELECTRICAL CHARACTERISTICS

T_C=25℃ unless otherwise specified

SYMBOL	PARAMETER	CONDITIONS	MIN	MAX	UNIT
$V_{CEO(SUS)}$	Collector-Emitter Sustaining Voltage	I_C= -200mA ;I_B= 0	-60		V
$V_{CE(sat)}$	Collector-Emitter Saturation Voltage	I_C= -4A; I_B= -0.4A		-1.1	V
$V_{BE(on)}$	Base-Emitter On Voltage	I_C= -4A ; V_{CE}= -2V		-1.6	V
I_{CBO}	Collector Cutoff Current	V_{CB}= -70V; I_E= 0		-1.0	mA
I_{EBO}	Emitter Cutoff Current	V_{EB}= -5V; I_C= 0		-2.0	mA
h_{FE-1}	DC Current Gain	I_C= -2A ; V_{CE}= -2V	30		
h_{FE-2}	DC Current Gain	I_C= -4A ; V_{CE}= -2V	15		
f_T	Current-Gain—Bandwidth Product	I_C= -1.0A ; V_{CE}= -10V; f_{test}= 1.0MHz	1.5		MHz